SPEC

PROCESS ENGINEERS WHO BUILD

PROCESS ENGINEERING

FACILITY DESIGN

CONSTRUCTION

www.spec-eng.com

SPEC
PROCESS ENGINEERING & CONSTRUCTION

17 A Street Burlington, Massachusetts 01803
Phone (781) 221-0123 Facsimile (781) 221-7212

QUALIFICATIONS PACKAGE FOR PROCESS ENGINEERING AND DESIGN/BUILD

Table of Contents

PROCESS ENGINEERS WHO BUILD

PRIMARY SERVICES

DESIGN/BUILD MANUFACTURING:

Turnkey Delivery

Whether you are constructing a new facility or renovating an existing one, SPEC can perform all the necessary services to design and construct your new plant. As a design/builder, we maintain a staff of skilled engineers in the critical disciplines of process, mechanical, electrical and controls engineering as well as manufacturing oriented architects. To complete your project, SPEC also employs construction project managers and our own field superintendents. Your project will be executed from site selection, through design and construction, to the final punch out.

Upgrades and Maintenance

If you need less comprehensive upgrade or maintenance services, SPEC can supply the same level of expertise and management to your project. We are skilled at conducting projects with minimal interference to existing operations. We can supply our tested turnkey methods to safety upgrades, maintenance operations, new equipment installations, controls upgrades and code compliance work.

Process Scale Up

Taking a product out of development and into manufacturing is a difficult process that involves numerous decisions and trials. Similarly, increasing the efficiencies or improving an existing manufacturing process offers some of the same challenges, with the added problem of continuing to fulfill regulatory and customer requirements. SPEC can help in both of these circumstances. We have experience in working with your scientists and technical staff to help them work out the problems as your manufacturing process develops or changes. SPEC can then apply practical solutions that get you up and running quickly with minimal trial and error and the smallest possible budget.

DESIGN/BUILD LABORATORY:

Turnkey Delivery

When a product is in development, it is advisable to build a laboratory that will allow full flexibility to take that product through a commercial launch. Careful attention must be paid to workspaces, utilities and expansion possibilities. SPEC is experienced in developing a laboratory strategy that will provide the most efficiency and flexibility when you are in a product development cycle. We are fully knowledgeable about the problems you will face during process development and scale up and can help your company set the stage to minimize those issues.

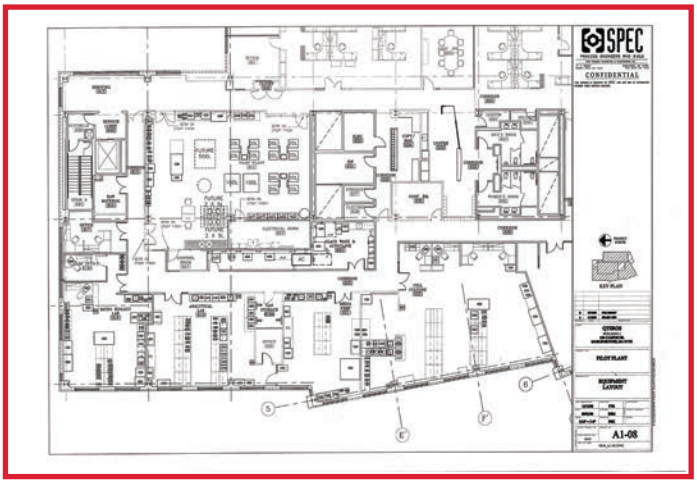

INDIVIDUAL SERVICES

In addition to our primary services, SPEC offers the development and manufacturing company a wide variety of support services on a smaller scale. These include:

- As-built documentation
- Facilities piping
- Hazard analysis
- P&ID and PFD development
- Process and utility piping
- Process development, control, and improvement
- Mass and energy balance
- Particulate control systems
- Instrument selection/procurement/calibration /installation
- Electrical classification
- UPS / generator engineering & installation
- Electrical fault studies
- Intrinsically safe instrumentation system design
- Instrument network design & installation – profibus, ethernet, modbus, foundation fieldbus, ASI
- HVAC system analysis, design and upgrades
- Boiler analysis, design and upgrades
- Correction of chronic HVAC problems
- Building automation/energy management system analysis, upgrade or replacement
- Energy cost reduction, analysis and implementation
- HVAC system master planning
- Owner's representative in contracting with energy service contractors (ESCO)
- Due diligence reports
- Peer review/second opinion
- Hazardous area classification
- Hazardous chemical storage regulations
- Contamination control

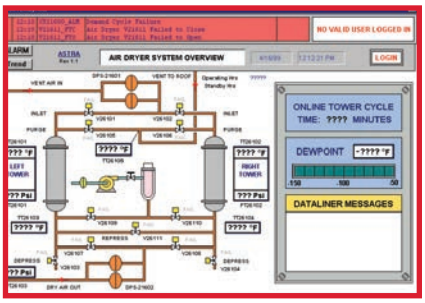

COMPANY OVERVIEW

INTRODUCTION

The simplest way to describe SPEC Process Engineering and Construction (SPEC) is that we are "**engineers who build.**" For most of our clients, we handle the entire project, from preliminary budgeting and project planning through construction. For many projects we are also able to assist with project financing. Our unique approach to design/build has the benefits of keeping project costs down while keeping project efficiency and quality high.

Our company is sharply focused on manufacturing and product development related facilities for fine chemical and pharmaceutical companies. Our entire team is specifically oriented to the delivery of this type of project from the specification of process equipment to the navigation of regulatory hurdles imposed by the FDA, environmental agencies and local authorities.

We also like to offer options for our clients. At the client's request we can supply an individual project component such as process engineering, project management or cGMP consulting. But even when we only supply a component of a project, the client gains from our construction oriented approach. With SPEC, you get realistic, practical service based on engineering knowledge combined with street-wise construction experience.

But what makes our approach different? There are several points:

- **We are truly an integrated firm**. All of our design engineers, process engineers, construction/project managers and controls staff are under the same roof.
- **The person managing the construction will be an engineer with construction experience** - not just a construction person. For most technically and regulatory driven projects, this can make a tremendous positive difference in the quality of the final project.
- **We guarantee what it will cost up-front.** Our goal is to lock a budget in, before detailed design begins. We can typically achieve this with only 2% to 5% of the project budget expended.
- **We take the risk.** We not only guarantee the price, but we are responsible for all aspects of the project right down to the ordering of the equipment.

Our focus is to undertake modestly sized projects. Our projects rarely exceed $25 million in total project cost, with a more common range being $100,000 to $15 million.

To really understand SPEC, you need to understand our approach to projects. The best way we have found to insure a successful project is to have a well thought out approach to the project, the project management and validation.

PROJECT APPROACH

The SPEC approach follows a design/build model, with some modifications to overcome the deficiencies in a typical design/build project as practiced by others in the construction industry. The following is an overview of our approach to a typical manufacturing project for a process-based company.

OBTAINING A DESIGN/BUILD PROPOSAL

The first step in any design/build project for SPEC is the development of a design/build proposal for the entire project. This is done by developing the scope of work in conjunction with the owner and using that preliminary design with selected sub-contractors to develop a preliminary document set and budget.

During this initial phase, SPEC works to understand the client's standards and if applicable, the existing facility. Complete knowledge of standards and existing conditions expedites the design of similar systems, and highlights shortcomings, if any, of the existing installation. Once the scope is fully developed, a schedule is compiled and all information is reviewed with the client.

The client's standards and the project scope become the design basis for the project. This design basis is key to defining the detailed engineering scope including the list of drawings and specifications which will be completed during detailed design.

DETAILED ENGINEERING

After a design/build contract has been negotiated, the detailed design effort begins. SPEC typically divides projects into two "tracks", with one group focused on the development of P&ID's and the process equipment and the second group completing engineering of the mechanical, electrical and architectural details. Design documents are only completed to a level of detail required to facilitate the bidding process.

During the bidding process, it is very possible that potential subcontractors will suggest improvements in the design that will reduce cost or enhance the quality of the project. The drawings are then brought to a further level of detail incorporating these suggestions from the subcontractors where appropriate. This results in a project that is well designed, efficient and constructable.

SPEC is standardized on AutoCAD. SPEC believes strongly in CAD, and we require all our engineers to work in the CAD environment. Additional design programs for piping, instrumentation, and electrical design are also available, based on the level of design documentation required.

BUYING OUT THE PROJECT

Most projects will require a variety of construction trades such as:

- Mechanical (process piping, HVAC, plumbing & fire protection)
- Electrical (power and instrumentation)
- Steel (decking and equipment supports)
- Concrete foundations and housekeeping pads etc.
- Architectural (exterior & interior trades)
- Controls & instrumentation

Using the design documents, a written scope of work and specifications for different aspects of the project, each of the above trades are bid and the results presented to the client for review. Each bid will be compared to the original budget for the project, and final selection of subcontractors made in consultation with the client. SPEC will hold all contracts for the client, but the client will always fully participate in the selection process.

SPEC will prepare specifications for all equipment involved in the project, and where appropriate, will obtain competitive bids for this equipment. Bid information would also be presented to the client to allow a coordinated selection of the best equipment suppliers. SPEC will prepare all purchase orders for equipment and manage the expediting process as part of the overall contract.

In addition to purchasing major process equipment, SPEC believes that the process automation component of the project is crucial to a successful startup. Therefore SPEC has developed their own automation group to provide the detailed design, programming, and startup services directly. Because the automation engineers are intimately involved with the client right from the scope definition phase of the project, instead of just starting at the end of the buy-out phase, the time for startup is significantly reduced.

CONSTRUCTION

The key to successful construction is the coordination of the subcontractors on the site. SPEC's project manager also performs the construction management role during this portion of the project. Day to day site management is typically handled by a Site Superintendent who will work hand in hand with the project manager for the duration of the project. Larger projects may sometimes require multiple Site Superintendents to focus on different aspects of the construction.

This professional team will also be responsible for orchestrating the many meetings that help keep a construction project on track - from the daily meetings with the subcontractors to weekly meetings with the owner for updates on budget and schedule.

VALIDATION AND TESTING

Even though validation is after construction on this list, the validation effort actually begins when the project begins. During the design phase, SPEC will work with the owner and their third party validation consultant to identify all crucial areas of validation and determine with the client what systems and equipment need to be validated and what level of documentation will be developed. Please see the validation section that follows for further information on validation procedures.

PROJECT MANAGEMENT APPROACH

A well-planned project approach needs strong project management to actually make it work. Without experienced project management and solid project management tools, the many issues and decisions that are presented during a project can simply not be handled in the appropriate way.

Good project management has its highest impact on the project in two areas: scheduling and cost control.

PROJECT MANAGEMENT – SCHEDULING

For manufacturing facilities, scheduling revolves around three key aspects of the project:

- Design
- Process equipment
- Contract packages

As a true design/build firm, SPEC starts each project by defining the project's goals with the owner from a cost and schedule point of view. This allows us to formulate a milestone schedule working backward from the required facility completion date. Some of the expected schedule items for a typical project include:

- Client process validation
- Client engineering runs
- Completion of OQ's and PQ's
- Completion of punch list
- Contractor submittals
- Contract package release, bid and award
- Design - from concept to approval to release for bids

During the milestone scheduling review, key scheduling impacts are identified and examined for their effect on design. In the design/build method which SPEC utilizes, these impacts are explored up front and a design basis is selected to meet the overall project goals of schedule, cost, and functionality. In this way, SPEC, in conjunction with the owner, is able to flag key decisions very early, and address them to avoid redesign and scheduling impacts later in the project.

Weekly in-house project coordination meetings are held with the owner and all involved design disciplines. This meeting functions as a clearing house for the latest design developments as well as a project management tool for identifying and resolving design issues and conflicts.

Every issue identified is assigned a meeting number, which is carried in the meeting minutes, until the issue is resolved. Design drawing progress is tracked via a drawing control index which monitors design progress versus the schedule of release for bids.

Within the SPEC design schedule exists a parallel effort regarding all process equipment. Key facility equipment items are tracked from the initial data sheet through approval, bid, award, submittals, inspection, and receipt at the job site. SPEC tracks this data on our equipment control index, which indicates both the scheduled and actual dates for each phase for every single piece of equipment. This project management tool is critical in identifying items for expediting or special attention at the weekly coordination meeting. On fast track projects, the schedule frequently drives the design process as well as equipment selection, both of which are best served by a design/build approach to project delivery. Examples include:

- Early foundation release to avoid winter construction
- Exterior construction selected to support building enclosure prior to winter
- Selection of packaged HVAC units versus separate sections (indirect gas fired heating, air handling, and cooling)
- Selective use of used equipment
- Single sourcing for early award on selected equipment
- Start automation program prior to final design completion

Prior to completion of design, SPEC's project manager in conjunction with the construction superintendent, formulate the scope of work for each construction contract package. This is reviewed with the design disciplines for completeness, as well as exceptions and issues, which must be clarified to the bidders. In this way, SPEC ensures the quality of the bid package prior to release, thereby avoiding confusion, delays, and additional costs in the bid cycle.

Scheduling compliance is insured via weekly construction coordination meetings. After award of the various bid packages, the project manager tracks each contractor's submittals, deliveries, and installation progress against the master project schedule. Expediting of submittals, inspection of equipment at the factory, and vendor shop visits are utilized as means of insuring on-time delivery as well as adherence to project specifications.

Involvement of the appropriate design engineer is maximized in order to expedite the receipt and approval of submittals, as well as to clarify issues which arise during construction. The expeditious return of submittals and fast response on contractor questions (RFI's - Request for Information) is assured by SPEC's design/build approach. All our personnel are committed to the final project result and are not tied solely to marketing, design, construction, or controls.

PROJECT MANAGEMENT – COST CONTROL

Cost control is most effective when it is focused on three critical areas:

- Assuring that the original design represents the least possible expenditure to meet the owner's operational and quality goals.
- Eliminating "scope creep" so that the project scope does not expand beyond it's agreed upon intent during the construction phase.
- Eliminating inefficiencies and excess overheads commonly found in technically and regulatory driven projects.

All of SPEC's clients have fixed budgets for their projects, and most budgets these days are tight. The SPEC approach is to work very hard to design and build a facility that meets the budget but also meets our client's expectations while meeting regulatory requirements. While we have not discovered a "scientific method" for doing this, we feel that we have developed an organization that thinks and acts this way.

Many of our staff are from the owner's side of the table and have had hands-on operating experience. Our people care directly about the budget and are not tied to standard engineering solutions.

Eliminating "scope creep" during construction can be a little more scientific because various control mechanisms are put in place. SPEC uses recognized change order procedures and weekly job cost reporting so that the owner and the project team are always aware of current project costs as well as where they are heading.

However, we have found that we have to go beyond these standard management tools to effectively control project scope. One way we do this is to involve the trades (Mechanical, Piping, Electrical, etc.) early in the design process. By involving these professionals, current market prices are made available to the design team allowing them to avoid costly design decisions.

We also find that requiring our engineers to have regular involvement on the site helps eliminate scope growth. When a request for additional work comes from someone on the owner's team, there is someone on site who can quickly assess the request, estimate a budget for it, and many times find alternative means of meeting the request.

The last area of cost control for SPEC is one that is built into our very structure. By having a vertically integrated team we can avoid two common cost drivers - overhead and inefficiency. Many of our people perform double duty. For example, site superintendents will commonly assist in commissioning & turnover. Secondly, since many of our engineers will not only design but also be responsible for building a project, there is very little time (i.e. money) lost in translating the project design to the people actually doing the construction work.

Typical examples of the project tools, which SPEC uses to control costs, are listed below and attached.

- The design/build contract budget indicates the contract budgets by account line, which are then tracked from bid to placement to contract completion.
- The bid tabulation, which evaluates the technical offering as well as the vendors/ subcontractors schedule and budget compliance. Client sign-off is required by SPEC on all bid tabulations.
- The contract change order which is used to document scope additions as well as all shifts of money from the contingency account. Again SPEC requires client sign-off on all change orders.

PROCESS AUTOMATION APPROACH

PRELIMINARY DESIGN PHASE

SPEC automation engineers get involved in the project during the initial design and scope definition phase. How the plant is supposed to operate is as important as how it is constructed, so preliminary functional specifications for plant automation are developed in the preliminary design phase of the project. The I/O count, instrumentation standards, operator interface requirements, and the recipe and data collection philosophy are defined up front so a qualified price estimate can be developed. This is in contrast to the traditional engineering/bid methods of construction which leave the real fixed costs of the process automation budget to the later bidding phase.

DETAILED DESIGN PHASE

During the design phase, the control panels are designed and detailed program functional specifications are developed. Due to the fast track of SPEC projects, automation programs are developed in house as soon as the specifications are completed and approved. SPEC has a team of experienced engineers to program a variety of automation platforms, PLC, DCS, and computer based control systems.

CONSTRUCTION PHASE

During the construction phase, SPEC automation engineers purchase instruments and automated valves. They are inspected individually by the purchasing engineer prior to release of the item to the installing contractor. SPEC's automation engineers then provide field supervision, answer RFI's and provide general assistance to the overall SPEC field superintendent as well as the instrument installers, electricians, and calibration technicians.

STARTUP

After mechanical completion, SPEC automation engineers work closely with the process engineers to start up each automated process and execute detailed site acceptance testing procedures.

LONG TERM SUPPORT

Through on-site assistance and use of remote access communications, SPEC can provide services for system upgrades, troubleshooting, and periodic backup of control system computers.

PROJECT PROFILES

PHARMACEUTICAL

JOHNSON MATTHEY, MULTIPLE PROJECTS
DEVENS, MA

Project Description:

SPEC has supported Pharm Eco Labs (now Johnson Matthey Pharmaceuticals Services) dating back to 1994 when SPEC renovated the client's first pilot scale manufacturing facility in N. Andover, MA. This facility is still operational and SPEC has supported its ongoing operations.

As the company grew and required additional facilities, SPEC master planned The JMPS facility in Devens, MA in 1998. After completion of the 1st phase of construction JMPS (at that time Pharm ECO Labs) occupied approximately ½ of the three available wings constructed. Phase 1 included corporate offices, research, development labs, QA/QC labs and a central utilities plant, and shell/core work creating the basis for the campus that exists today.

Over the course of the last 5 years SPEC has designed and completed construction of numerous capital improvement projects at this site. Most recently SPEC designed, constructed, commissioned and supported the completion of two manufacturing suites for API's. This project included upgraded utilities to support the manufacturing requirements. Virtual tours of the Devens site can be viewed at: http://www.jmpharmaservices.com/tours/tours.html

The Project Highlights include:

- Design for blast relief/resistant construction
- cGMP pharmaceutical manufacturing suites
- Utilities upgrade for emergency power, syltherm low temp. chiller system, etc.
- Hastelloy C and stainless reactors
- Delta V Batch controls platform
- Guaranteed maximum price contract, TIC < $8 million.
- Open book accounting with 100% of savings returned to the client
- Single contract linking design intent with construction outcome
- Performance based criteria for measurement of project completion

CONFIDENTIAL CLIENT, LYOPHILIZATION FACILITY
MANCHESTER, NH

Project Description:

For a new 5 year commercial production contract, the client's existing 3,000 sq ft lyophilization facility needed to be expanded and its capabilities enhanced to provide all the functions needed by their client's product requirements.

The existing production facility consisted of a single lyophilizer, autoclave, depyrogenation oven and utilized fan powered HEPA filters. Clean rooms comprised approximately 1,200 sq ft. SPEC was contracted to provide a completed facility which included two lyophilizers, five indoor air handlers with ducted ULPA filters, 2,000 sq ft of clean room production space and an additional 3,000 sq ft of support spaces. The project was completed in ten months from start of demolition to certification of clean rooms.

The Project Highlights include:

- Contract basis- Open Book, guaranteed maximum price
- Facility design for both FDA and EU compliance
- Clean rooms ranged from Class 8/Grade D up to Class 5/Class A
- Fill and Capping Rooms utilized Gordon Flush grid with integral lighting
- USP water system starting from Point of Entry treatment of well water
- Hot WFI system consisting of Steris 200 Kg/hr generator, 1100 L storage tank, 15 GPM fristam loop pump and three WFI cooler drops.
- Steris Finn Aqua 165 Kg/hr Clean Steam generator
- Expansion of existing chilled glycol and compressed air systems
- Provision of parallel propane fired Fulton boilers for plant steam
- Masy wireless monitoring system for room temperatures, humidity, and pressure differentials
- SPEC scope included certification of clean rooms for Air Change Rates, Velocity at 90 LFPM in Class 100 areas, room to room pressure drops, and temperature

ALKERMES, CLEANROOM BUILD-OUT
CAMBRIDGE, MA

Project Description:

SPEC successfully designed and built an packaging cleanrooms in tight space without disturbing existing operations.

The Project Highlights include:

- Class 1,000 cleanroom space with a class 100 booth
- Aseptic packaging
- Tight humidity controls
- Reconfiguration of existing space
- Project budget of $1M

DIAGNOSTICS FOR ALL, PILOT PRODUCTION
CAMBRIDGE, MA

Project Description:

Diagnostics for All, a medical device start-up, grown out of Harvard University, received funding from the Bill and Melinda Gates Foundation and was developing low-cost, innovative, practical diagnostic devices. SPEC began working with DFA as they moved from product development to pilot production for clinical trials.

SPEC began by assessing and documenting the existing operation for manufacturing the medical diagnostic devices, including the equipment used, the step-by-step procedure, and the manpower required. SPEC and DFA then went over each step with the intent to eliminate or reduce time and waste, which resulted in several significant improvements to the process allowing them to scale-up production for clinical trials.

Key improvements:

- An improved adhesive patterning process was developed which eliminated an expensive raw material and improved product alignment.
- A more efficient continuous convection oven replaced the existing batch laboratory ovens which increased throughput without increasing labor.
- Quality was also improved by better alignment of the various layers, by designing special jigs and application equipment to ultimately reduce defects.
- SPEC designed an improved climate controlled space, and developed a layout that would allow DFA to increase production without adding manpower within the existing space.

This was presented in a phased approach that allowed DFA to increase production as demand increased.

ASTRA-ZENECA, METHANOL DELIVERY CONTROL SYSTEM WESTBOROUGH, MA

Project Description:

SPEC worked with Donovan Engineering and Construction as a contracting team to install a new methanol storage, delivery, and waste collection system for AstraZeneca pharmaceuticals in Westborough, MA.

SPEC provided a full scope of instrument & control engineering for the project.

- Control software detailed design specification documents
- Control panel design, schematics, and construction
- PLC programs using Modicon Concept with IEC-61161 standards
- Instrument calibration
- Electrical installation for all instrumentation and control wiring in CL1 Div 1 as well as non-rated areas
- Intellution Fix SCADA system to monitor, record and alarm, and control the whole process
- Detailed instruction manuals for the operators

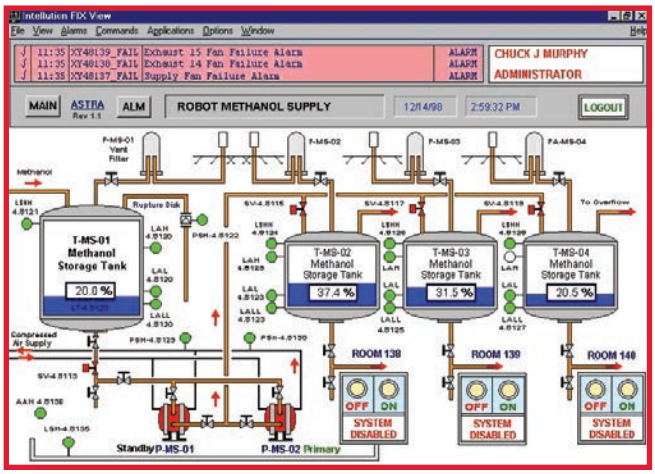

ASTRA-ZENECA, AIR DRYER INSTALLATION
WESTBOROUGH, MA

Project Description:

SPEC worked with Donovan Engineering and Construction as a design-build team to install a new Air Dryer / Filter system for Astra - Zeneca Pharmaceuticals in Westborough, MA. SPEC provided the engineering design documents for piping and electrical installations. SPEC's contracting group coordinated the trades and contracts for the installation, and built an Intellution Fix SCADA system to monitor, record and alarm the compressed air dryer system for the Astra-Zeneca plant in Westborough, MA.

Controls engineers from SPEC worked with the equipment manufacturer to modify PLC code to get the required data from the controlling PLC. The SCADA System screens were designed to the client's corporate standards.

Some of the key successes of this project included:

- A comprehensive design/build approach that met the client's strict schedule and quality requirements.
- Early coordination between SPEC's controls engineers and the air dryer equipment vendor packaged control system was integrated into the plant-wide data networks, and followed corporate equipment standards.

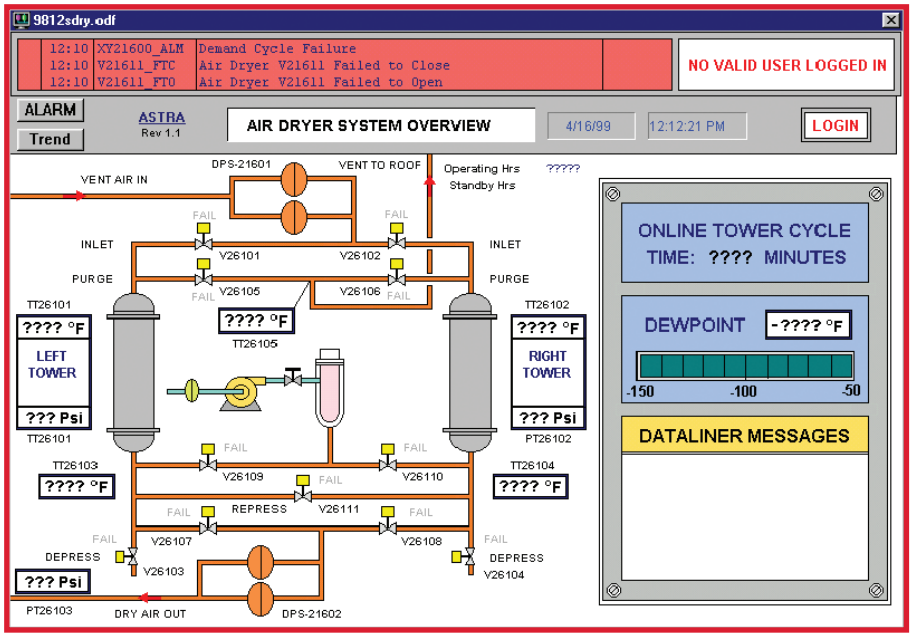

FINE CHEMICALS

STREM CHEMICALS, FACILITY UPGRADE
NEWBURYPORT, MA

Project Description:

SPEC designed and constructed a facility upgrade to provide H (high hazard) rated space for storage and operations for the client.

The existing building had a previous design for H that included blast resistant construction. SPEC utilized a deflagration mitigation approach to accomplish the same result at a fraction of the cost.

The Project Highlights include:

Budget & Schedule

- The contract basis was fixed cost construction
- Project value: approximately $1.5 Million
- Executed on schedule and on budget
- The contract basis was fixed cost construction

Code Considerations

- The facility design complied with Massachusetts Building Code and NFPA code
- SPEC held a pre-construction fire department review of the design basis, including the State Fire Marshal's office.

Rigorous Technical Requirements

- A key project target was that the exhaust rate be no less than 1 CFM/sqft
- Special utilities included standby power, LEL system with shunt trip, fume hood sash position flow control

Project Construction

- Total building: 15,000 sqft
- Area renovated: 5,000 sqft
- All construction was performed during continuing operations

ARKWRIGHT INCORPORATED, NEW MIX FACILITY – FISKEVILLE, RI

Project Description:

SPEC has designed, constructed and performance tested a 5,000 square foot, $4.7M, specialty coatings manufacturing facility within strict budget, time and performance constraints. The project utilized blast resistant / relief construction Class I, division I & II due to solvents used in the process. In addition to meeting the client's goals for schedule, budget and performance requirements, SPEC's design/build approach provided single source responsibility to the owner. Our solution provided:

- Accuracy for batch ingredients of less than 1%. Powder delivery system capable of dust free performance at accuracy specified. Flow control of bulk solvents, and bench scale additives via a closed loop system to insure operator safety and product quality.
- Automated Batch Control System utilizing Modicon PLC's and Intellution Visual Batch software, with preprogrammed recipe management and handheld barcode scanners to track raw material lots through entire batch process to insure quality and support enterprise wide management systems.
- Complete performance certification of facility to certify that our design met the requirements of the contract. Performance requirements defined batch accuracy and run rates, supporting building utility requirements and the facility schedule of construction. All SPEC subcontractors were held to the same performance criteria to deliver an integrated construction package for this design/build project.

CREATIVE MATERIALS, RELOCATION
AYER, MA

Project Description:

SPEC renovated the existing facility (including layout, HVAC, plumbing, fire protection, and electrical modifications) to accommodate the client's relocation. SPEC designed and constructed the majority of the building layout including office space, conference rooms, process mix rooms, research and analytical labs, storage rooms, and warehouse space. The existing bathrooms and kitchen areas were simply cleaned up as they functioned adequately for Creative Materials' needs.

The new facility met Creative Materials' current and future needs for office and manufacturing spaces as well as allowed them to store larger quantities of raw materials including some flammable products at their facility.

One of the main goals of the project was to re-use as much of the existing building features and utilities as possible to save the client money and cut down on renovation time. For instance, the client required greater HVAC control than what was already installed. Instead of replacing the existing air handler equipment with PLC based upgrades, SPEC installed modulating dampers inside the rerouted ductwork with a central PLC to control them. This saved the client significant expense on new HVAC equipment.

Engineering for the project began at the start of 2011, with a full design package completed in March of 2011. Construction ran from May through September of 2011, with the client able to move into the full renovated space in September 2011.

When the project was finished, SPEC delivered a turnkey, fully functioning building that the client was able to immediately move into with their equipment and hook up to building utilities.

The Project Highlights include:

- Contract basis- GMP, fixed price contract
- Square footage: 26,000 sq ft.
- On schedule and on budget

DSM NEORESINS, MULTIPLE PROJECTS
WILMINGTON, MA

Client History:

SPEC began working with DSM in 2009 and has continued to support DSM, regularly, in a variety of capacities since that time, including a recently completed major site renovation. Projects have also included process review and upgrades, process safety management support, and maintenance. SPEC has also supported DSM with quick response troubleshooting, thanks to our close proximity to DSM's Wilmington facility, less than 15 minutes away.

Project Description:

DSM, a longtime client of SPEC, decided to invest in their site for the next 20 years worth of sustainable production. In order to achieve this, a major site renovation was required which involved an extensive permitting process to include Planning, Conservation, the Building Commission, and the local and state Fire Authorities. The site had existed since the 1960's and had changed hands half a dozen times. For all intents and purposes, existing conditions had been "grandfathered" in and had not triggered any major code require upgrades. To compound matters, the site was located on two adjacent lots owned by separate entities and was within a groundwater protection district (GPD). This made permitting more complex as the site was already over the allowable limits for impervious coverage.

The town officials were engaged very early in the project in order to identify any show stoppers. It was quickly realized that SPEC had to be very smart with its design approach to not trigger any major site upgrades while maintaining a responsible level of compliance. This was a challenge since we are installing several new structures. This was accomplished by replacing currently paved areas or taking old structures down.

Since the site was located in a GPD, and we were performing work inside the 100 foot wetland buffer zone, the conservation committee got heavily involved. In order to not slow down the overall project, we were allowed to break the permit package into two separate packages; 1) work inside the buffer zone (20% of scope) and 2) work outside the buffer zone (80% of scope). This allowed us to break ground and start construction while working in parallel with the conservation committee to obtain approval on the remaining work.

The Project Highlights include:

- Contract Value: $ 20 M
- Total Area Renovated: 78,000 SF

DSM NEOSOL, RELOCATION
EAST PROVIDENCE, RI

Project Description:

Delivered on a design/build basis, this project involved the relocation, upgrade and startup of DSM NeoSol's entire polyurethane manufacturing operations as well as the build-out of their offices and laboratories in the new location. SPEC found and evaluated the appropriate new site location that would meet DSM's short-term and long-term operational goals. SPEC also worked closely with local authorities and environmental consultants to secure all required permits and site approvals.

The Project Highlights include:

- Two phase project approach.
  - Phase 1 – East Providence building retrofit
  - Phase 2 – Relocated W. Warwick operations
- 67,700 sq ft single story base building separated into two buildings with double 4-hour walls for the following classification areas.
  - Building 1 - 13,000 sq ft high hazard (H2) use group space.
  - Building 2 - 54,700 sq ft with 4 control areas:
- 3,300 sq ft H2 flammable storage occupancy.
- 51,300 sq ft mixed use area with B, F-1 and S-1 use groups.
- Exterior solvent tank farm.
- New manufacturing platforms for solvent and aqueous manufacturing.
- Scale-up and improvement of coatings operation.
- Delta V DCS batch process system with over 700 points.
- New process utilities and distribution including cooling tower, 230°F pressurized hot water boiler, compressed air and breathing air, and bulk nitrogen storage.
- Added 2000 amps of 480 volt power and distribution.
- Evaluation and re-commissioning of two 150 psi boilers and 100 psi compressed air systems.

PROCESS ENGINEERS WHO BUILD

WATERS CORPORATION, THERMAL OXIDIZER
TAUNTON, MA

Project Description:

Waters decided to install a regenerative thermal oxidizer (RTO) at their Taunton chromatogrophy media manufacturing facility. SPEC provided detail design, construction and performance testing support to meet a hard deadline for completion. Project cost approximately $2M.

The Project Highlights include:

- 60,000 cfm regenerative thermal oxidizer (RTO).
- New roof mounted stainless steel duct for exhaust collection. Allowed for uninterrupted plant operations with a weekend demolition of exhaust fans and tie-in to the new RTO.
- New make-up air handlers with cooling capability for the manufacturing suite.
- Building management upgrade to allow pressure control for permanent total enclosure status.
- Construction of an air lock for material flow to the production suite.
- Site electrical service upgrade, multi tap to a new exterior 2000 amp service, including transformer replacement, weather-tight switchboard, and distribution to new and existing panels.
- New natural gas service to building.

CLEAN TECHNOLOGY

KONARKA, THERMAL OXIDIZER
NEW BEDFORD, MA

Project Description:

Konarka, a fast growing photovoltaic company out of Lowell, MA, decided to modify their process and change their base solvent to a chlorinated constituent that required water scrubbing downstream of their existing thermal oxidizer. To address this new requirement they purchased a new thermal oxidizer from Durr, a leading supplier of industrial cleaning and filtration systems, with a downstream scrubber that was designed to handle the new solvent. After the purchase, Konarka realized that they needed help with the installation of the new unit and contacted SPEC. SPEC immediately set up a conference call with both Konarka and Durr to quickly identify the project requirements and timeline. SPEC's experience installing similar thermal oxidizers at other clients' sites made us an excellent partner for Konarka on this project.

The project consisted of satisfying a list of installation requirements provided by Durr to Konarka, which ultimately provided the contractual basis for SPEC's scope of work. SPEC ensured that all of the required infrastructure: power, utilities, structural concrete pad, site work, etc. were designed and installed to meet Massachusetts code and satisfy the unit's requirements. The timetable for this project was particularly important since the unit was expected to ship in June, with all installation requirements completed by its arrival at Konarka's facility, and start up in July 2009. SPEC had less than three months to help Konarka prepare for the thermal oxidizer delivery and installation.

The Project Highlights include:

- **Permitting** – SPEC's engineering staff provided stamped drawings for submittal for a building permit required for the concrete pad. SPEC's construction team worked with the Fire Department and the Building Inspector to obtain the proper permits and ensured that all design requirements were met. They also followed up with the local authorities at the end of the project to close out the permits.
- **Schedule** – The project execution was accelerated because SPEC was brought on after the product had been ordered. In order to meet the tight schedule, SPEC prepared permit level drawings to submit to the town for approval prior to final construction drawings being completed. This allowed us to obtain the permit and subcontract the site and concrete scope early so that we could have the pad poured and cured in time for the arrival of the equipment.

PROCESS ENGINEERS WHO BUILD

QTEROS, PILOT PRODUCTION
CHICOPEE, MA

Project Description:

Qteros is a venture capital funded cellulosic ethanol company that was growing out of small lab space located near the University of Massachusetts Amherst campus. This client needed to grow quickly. During discussions with a recommended local piping contractor, the client asked for assistance in planning a new lab/pilot space. The contractor explained that this was not their area of expertise and recommended that they contact us. Their CEO got in touch with us soon afterward and SPEC was contracted for their complete laboratory and R&D pilot fermentation area.

The Project Highlights include:

1. **Selection and purchase of analytic laboratory equipment for their new lab.** Their own scientists were too busy developing next generation biofuel fermentation bacteria to research and talk to vendors about HPLC and Gas Chromatography (GC) systems, so we introduced them to a consultant in our network, a lab equipment specialist. This consultant interviewed their scientists to determine their analytic methods, and worked with vendors to negotiate volume pricing for outfitting all instruments and equipment in the new lab. All of the required lab instruments were placed on order six weeks after SPEC initiated this effort.

2. **Selection of rentable lab space.** SPEC developed a preliminary facility program and related, estimated utility requirements to guide Qteros's evaluation of potential buildings. Once the client honed in on a specific facility we revised the floor plans to test the fit of their intended program in the target facility. This particular location was especially attractive to our client as it was already fully outfitted with with lab benches and utilities from a previous tenant.

3. **SPEC purchased several million dollars of pilot scale fermentors for the new labs.** The client was having difficulty getting comparable quotes and a delivery schedule that met their aggressive timeline for R&D results. SPEC brought in additional vendors, honed in on the exact options and systems to purchase, and succeed in reducing their costs and improving delivery of both their 20L and 100L fermentation systems.

CONFIDENTIAL CLIENT
FAST TRACK, CELLULOSIC ETHANOL PILOT PLANT
ONEIDA, NY

Project Description:

The client initially contracted SPEC to provide process engineering expertise for their fermentation section of a pilot scale R&D line. Within a few weeks of the two teams working together, SPEC's assignment was expanded to include the full pilot line design, procurement and delivery of skid based plant modules. The client's extremely aggressive schedule targets precluded the purchase of new equipment. Therefore, SPEC identified and purchased used tanks, agitators, an autoclave and filter press. After putting all of the long lead equipment on order, we developed P&ID's for the full process, added in a DCS, engineered control panels, and bought all the instruments.

With the process skids well underway, SPEC's scope was further expanded and we took on the complete construction responsibilities for installing the skids, supplying all the needed utility systems and piping, as well as final check out, commissioning and start up. SPEC prequalified approximately 10 bidders resulting in three primary subcontract awards to union contractors whose work area included the client's Albany, NY facility. During an intense 12 week period on site, a 30' x 140' concrete housekeeping pad was placed, 12 different utility pipe lines were installed in a vertical rack system, the base building electrical system was upgraded to 1600 amps, and all the process skids were landed, hooked up, tested, and commissioned. The compressed schedule was, in part, possible as SPEC had the majority of the process equipment shipped to one of our design build team members, allowing us to directly supervise the skid fabrication, electrical instrumentation assembly, installation of control cabinets and execute a Factory Acceptance Test (FAT) on the skids, local to us in Massachusetts. The onsite installation of utility systems for chilled water, compressed air, steam, and waste water was done in parallel and was itself expedited by the shop fabrication of 8000 LF of rack piping and related structural steel supports.

Controls used included: Seimans PCS7 DCS, approximately 250 points of Profibus connected I/O and VFDs, and Endress & Hauser flowmeters.

SPEC supported the client throughout plant start-up and was integrally involved in control system start-up. The plant is now running at full capacity.

BIOPHARMACEUTICAL

APPLIED BIOSYSTEMS
REGIONAL MANUFACTURING FACILITY
BEDFORD, MA

Project Description:

SPEC completed a new manufacturing facility for Applied Biosystems in Bedford, MA. Ground breaking took place in the fall of 2002 with the startup and turnover in the 3rd quarter 2003. Product qualifications have been completed and the owner is moved in and manufacturing product.

This greenfield project provides the owner with the ability to manufacture multiple product lines and comply with cGMP's. Batch records are generated via the Delta V control system providing the owner with the flexibility to accommodate multiple batches and comply with customer and regulatory agency documentation requirements.

The Project Highlights include:

- 30,000 sq ft single story bay base building including 5,000 sq ft constructed to meet high hazard classification and an additional 9,000 sq ft of equipment penthouse, and space for office and QA/QC functions.
- Process utilities including RO/DI, plant air, 4°C & -20°C glycol systems, vacuum & high vacuum.
- Waste treatment and hazardous waste storage areas and underground fire water containment system.
- Bulk solvent storage tank farm with solvent metering and truck unloading systems.
- S88 compliant Delta V Batch control system.

SPEC Process Engineering & Construction delivered this project on a design/build basis and is responsible for all aspects of the project. Our package delivers an integrated solution with the following contractual features:

- Guaranteed maximum price contract
- Open book accounting with 100% of savings returned to the client
- Single contract linking design & construction
- Performance based criteria for measurement of project completion

AVANT, PILOT PRODUCTION
FALL RIVER, MA

Project Description:

Pilot manufacturing facility in multi-tenant building.

The Project Highlights include:

- Labs, offices, and clean production.
- 2 production suites
- Small-scale cGMP fermentation
- 3,455 sq ft of class10,000 room with class 100 areas
- Ducted HEPA's
- Efficient use of existing systems
- Emergency generator
- Clean steam
- USP – grade water
- $2 million project

GENERAL MANUFACTURING

CABOT, NEW MANUFACTURING FACILITY
HAVERHILL, MA

Project Description:

SPEC has provided a design/build package for this new manufacturing facility.

Project Highlights:

- Contract basis design/build - open book
- Contract Value $8.8 million (currently $1.3 under budget)
- Total Building: 111,700 sq ft
- Area Renovated: 87,400 sq ft

Schedule Highlights

- Kick Off 2/15/02
- Demolition Start 5/6/02
- Construction Start 5/20/02
- Train #1 Water Batch 11/4/02
- Train #2 Qualification Batch 11/18/02

Scope Features:

- Delta V System (1200 I/O), with Bus technology
- Multi Train & Multi Phase Installs
- Extensive Site Rehabilitation for Drainage

ST. GOBAIN, SOLID OXIDE FUEL CELL LAB
NORTHBORO, MA

A global technology company had developed a solid oxide fuel cell (SOFC) ceramic fuel cell technology in a European subsidiary. Their USA R&D facility was planning on taking over the R&D testing and further development.

Project Description:

To set up the SOFC lab the client had a shell building built with no utilities. SPEC was brought in to "get it built." When we first sat down with the client the "IT" was undefined.

The client only had process requirements for the fuel cell test stand which included:

- Gas supplies to the fuel cell stack which controlled flow, temperature and pressure.
- Steam supply to the fuel cell stack with controlled mass flow.
- Building permits, safety shutdowns systems and interlocks for hydrogen trailer hookup.
- Connections to client campus security and fire alarm safety shutdown systems.
- Cooling Water System.
- DI Water supply.

SPEC'S WORK INCLUDED:

Process

Fully welded hydrogen and methane piping, with code approved wall penetrations special alloy tubing for high temperature operation with heating/cooling stress analysis for engineered bends in the gas tubing to accommodate piping growth due to thermal expansion between 20°C and 850°C.

Electrical

New electrical panels and feeds with UPS and non emergency power feeds. Electrically classified Class1 Div1 around gas connections implemented using intrinsically safe wiring (instrumentation connections) and poured seal fittings (for power connections) near gas connections.

Controls

The project involved 2 PLC systems, safety interlock control, and test stand control; as well as wiring and integration with specialty test equipment for the fuel cell stack. SPEC installed a new data collection RSVIEW Scada system and the existing lab PLC was integrated for data collection and alarming. The scope included specialty high temperature instrumentation and fittings were specified for the gas streams.

NANO TECHNOLOGY

ASPEN AEROGELS MANUFACTURING FACILITY
EAST PROVIDENCE, RI

Project Summary:

This project was delivered on a Design/Build basis due to client schedule requirements. SPEC involvement began on the Process Flow Diagram (PFD) development level, included site selection and town approval, and continued through eventual plant start up and testing. It was a successful project as Aspen Aerogels obtained their facility both on time and on budget.

Project Highlights and Key Scope Features:

- Contract Basis – Open Book, guaranteed maximum price
- Contract Value - $23 Million
- Total Building Size – 150,000 sq ft
- High Hazard Manufacturing Space – 23,000 sq ft with space designed to double this amount in the future
- Tank Farm – Four 25,000-gallon and four 10,000-gallon tanks of hazardous materials

Also included two 100,000-lb liquefied Carbon Dioxide tanks and a 10,000-gal liquefied Nitrogen tank.

- Piping included high pressure (3000 psig) specifications designed for supercritical fluids.
- Process design via intelligent P&ID software and 3D pipe modeling program. SPEC worked with the piping subcontractor to develop isometric drawings directly from the modeling program, saving time and money during construction.
- ABB DCS batch process system incorporating continuous product flow management with over 1400 points.
- Process and manufacturing based performance criteria for measurement of project completion.

Schedule Highlights:

- Design Start – December 2004
- General Town Approval Obtained – April 2005
- Building Demolition Start – November 2005
- GMP Package Accepted – February 2006
- Construction Start – March 2006
- Plant Startup and Testing Completed – October 2006

PROCESS ENGINEERS WHO BUILD

E-INK, MULTIPLE PROJECTS
CAMBRIDGE, MA

The client contacted SPEC to work with them in expanding one of their downstream process manufacturing steps. This was necessitated by a very large order for E-Ink's displays for use in Motorola's low cost third world cell phone product line. SPEC built a new room within their existing building, installed new ventilation, a PLC based control system with three cabinets, and all the process and utility support piping to complete the installation. As part of this expansion, a new type of centrifuge was installed resulting in improved product recovery rates.

At the conclusion of this first manufacturing process debottlenecking project, E-Ink asked SPEC to upgrade and increase the capacity of their upstream reaction process as well. To allow this expansion to take place, the existing power feed to the building needed to be increased, and E-Ink decided to install a standby generator for their critical manufacturing steps as part of this electrical system upgrade. The three additional projects and the original downstream process were implemented within one calendar year at a total cost of approximately $2.2M. End result was an 83% increase in overall product yield. Project highlights are summarized below:

Reaction Process Area

- New "H" occupancy flammable storage and dispensing room
- (4) reagent storage vessels, 6 new reactor chillers, 10 ton air cooled glycol chiller
- PLC based process controls
- Explosion proof wiring, lighting and motors
- 2 new reactors and their associated feed systems installed
- New "HPM" Area Class with 4CFM/SF HVAC System

Electrical Upgrade

- New above roof mounted 100% rated 3000 amp switchgear
- Installed structural steel platform and foundations to support switchgear
- Trenching, conduit & underground feeders from 750 KVA Utility installed transformer
- New 1000 amp Board for new loads and back feed existing 80% rated board

Standby Generator

- Installed concrete pad, underground feeders, and fenced enclosure for new generator
- Generator Capacity of 750KW at 208V, Southworth Milton with 1285 gallon, integral base double wall, diesel storage tank
- Pritchard Brown Enclosure with critical silencer
- Indoor ATS and 65KVA UPS system for control systems and specified critical loads

MICROELECTRONICS

METRIGRAPHICS, RELOCATION
LOWELL, MA

Project Description:

Metrigraphics needed to expand their facility in parallel with creating a better cleanroom (more space, better enviro controls). The client had a compressed timeline because they needed to move out of their existing space, as well as be in a position to make new product that could be qualified by their customers prior to relocating completely.

A unique challenge for this project was the installation of a cleanroom inside of an existing multi-story multi-tenant facility using as much of the existing HVAC system, which was not designed for cleanroom function.

SPEC started working with the client early in the project, and began by aiding in the property search by providing layout and fit-out options. SPEC designed a cleanroom that could be successfully constructed utilizing the existing HVAC system, and helped coordinate the client's extensive equipment needs (identification of required space and utilities) into the new space fit-out. Phased project construction was used to allow for a pre-move by the client prior to full completion of the construction, to allow them to meet their deadlines for product testing.

Key deliverables on this project included schedule (critical), HVAC design and controls, utility distribution, power upgrade and fit-out.

To save the client money, SPEC built a 10,000 SF Class 1,000 cleanroom in the middle of factory space utilizing the existing HVAC equipment with the use of plenum construction and fan-powered HEPA units. This involved major changes to the function of the existing air-handling unit.

Project Highlights Include:

- Contract basis: Design-build, lump sum
- Designed the facility to Class 1,000 cleanroom standards
- Cleanroom relative humidity: 30% - 45%
- Multi-zone network controls for FFU's
- pH neutralization system
- DI water system
- Total Square footage: 36,000 total
    - 10,000 SF cleanroom, 180 FFU's
    - 2,000 SF H space

TEL NEXX, FACILITY CONSOLIDATION
BILLERICA, MA

Project Description:

This project involved the physical merger of TEL Nexx's facilities (recently purchased by Tokyo Electron) and TEL Epion's facility (purchased a few years earlier by Tokyo Electron). This multi-phase project included an office expansion and new cleanrooms. One cleanroom was built around an existing (and operational) cleanroom.

Project Highlights Include:

- The contract basis was Design/Build Construction, cost plus
- Project value: approximately $5 Million
- Total building: 90,000 sqft
- 3 Cleanrooms
    - 15,000 sqft of Class 10,000
    - 8,000 sqft of Class 1,000
    - 500 sqft of Class 10
- A key deliverable were cleanroom air changes
- Special utilities included toxic gas monitoring system (silane), DI water, and chilled water.
- The project was executed on schedule and on budget
- To expedite the overall project schedule, SPEC performed phased construction, worked in an operating facility, and released equipment and trades early based on the schedule requirements.

ENTEGRIS
BILLERICA, MA

Project Description:

This project was delivered on a design/build basis, with a fast track focus due to client requirements. Entegris & SPEC have enjoyed a successful project with schedule and budget targets obtained.

Project Highlights Include:

- Contract basis design/build open book
- Contract Value $12 Million
- Total Building Size 200,000 sq ft
- SPEC Area Renovated 109,000 sq ft
- SPEC Area Built – Out From Shell 41,000 sq ft
- Total Area Renovated 150,000 sq ft

Schedule Highlights:

- Start Design February 1, 2002
- Demolition Starts May 1, 2002
- Construction Starts June 1, 2002
- Phase I MFG First Move In August 19, 2002
- Phase I MFG Move In Complete September 30, 2002
- Phase II Laboratories Complete December 15, 2002

Key Scope Features:

- Conversion of Existing Class 10,000 Clean Rooms to Class 1000
- Significant Utilities and Power Installed to Ceiling Mounted "Patch Panels"
- 75 GPM RODI System with Trending System
- Full Service Kitchen and Cafeteria
- 50 HZ Power Converter and Distribution
- Upgraded Base Building HVAC Plant

ASTEX, DIVISION OF MKS
DIVISION HEADQUARTERS & MANUFACTURING FACILITY
WILMINGTON, MA

Project Description:

SPEC provided a Design/Build/Commissioning package to ASTeX , for the relocation of their combined manufacturing, R&D and office space from their old facility in Woburn, MA to the expanded facility in Wilmington, MA

The complete design/build cycle for this $9.2 M project lasted from January of 2000 to July 2000. The client needed an up and running facility by the first week in July due to lease constraints. Downtime was not an option that could be tolerated, which required careful phasing of both the construction of the new building and relocation from the old building.

The project highlights included the following technical elements:

- 118,000 sq ft gut and rehab of the existing building at 90 Commerce Way.
- Renovated for Clean Manufacturing, Discrete Manufacturing, QC/QA, R&D and support space.
- Assembly and demolition of Class 100,000 cleanrooms
- New Utilities including HVAC, High Purity Gases, Process Chilled Water, Plant Air, Electrical Service, Fire Protection and Waste Treatment Systems.
- Employee Amenities were also added including a full service kitchen, health club and complete upgrade to the office spaces.
- SPEC gave the building an upgraded look by providing a new façade, entry and reception area.

CONTROLS

INTELLISENSE, DIVISION OF CORNING INC.
HAZARDOUS GAS BUNKER
WILMINGTON, MA

Project Description:

SPEC provided a design/build package for IntelliSense Corporation for the design, construction and commissioning of a hazardous gas storage bunker to meet the code requirements for an HPM rated storage area. The scale up from R&D to production scale operations required dedicated space to meet the requirements of the local authorities.

SPEC integrated the code analysis with a design and construction package that delivered a complete and functioning project. SPEC also integrated the temporary hazardous gas monitoring system into a PLC based plant wide system.

CENTRAL ARTERY TUNNEL "BIG DIG" VENT FAN CONTROL BOSTON, MA

Project Description:

SPEC has successfully completed the programming and commissioning of the ventilation fan control system for the northbound "Liberty Tunnel" of downtown Boston's "Big Dig" project.

The ongoing work involves the support and upgrades to the Control System for additional monitors and maintenance / testing functions.

The engineering firm, Jacobs / Sverdrup Engineering, provided schematic design. SPEC completed the detailed design of the hardware provided by Square D / Modicon to meet the project specifications. SPEC developed the PLC code in compliance with IEC – 61131-1 to create reusable function blocks. This approach reduced the amount of software development time and made the Factory Acceptance and Site Acceptance Testing predictable and manageable.

VENT BUILDING CENTRIFUGAL FANS

The control system monitors traffic and life safety conditions and adjusts the amount of supply air to meet specific real time conditions within the tunnel network, via VFD's. Monitoring of fan bearing temperature and vibration insure that each system is maintained in good working order.

SPEC developed the Operator Interface Screens shown below using Intellution FIX HMI Package.

TYPICAL CENTRIFUGAL EXHAUST FAN HMI SCREEN

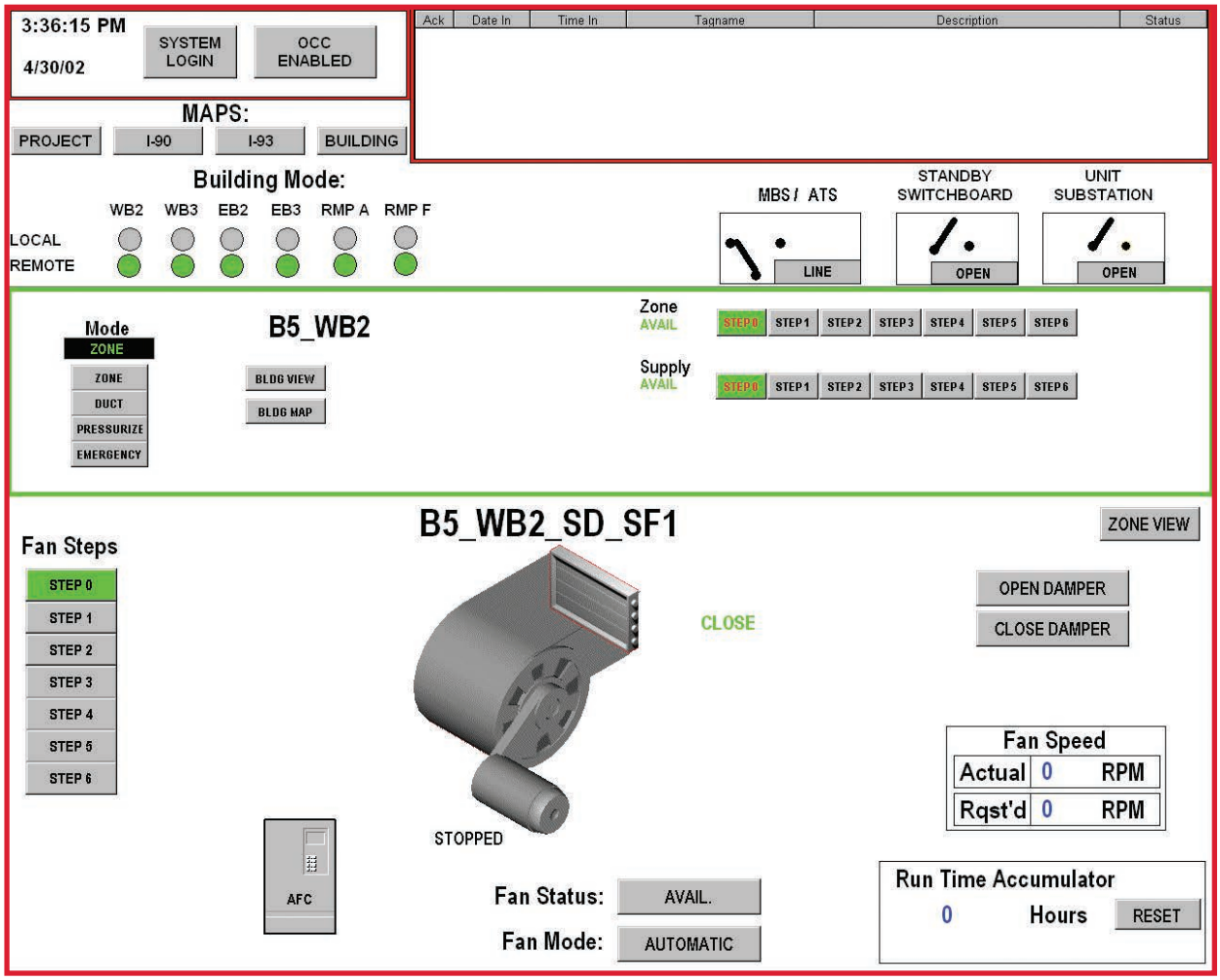

TYPICAL JET FAN HMI SCREEN

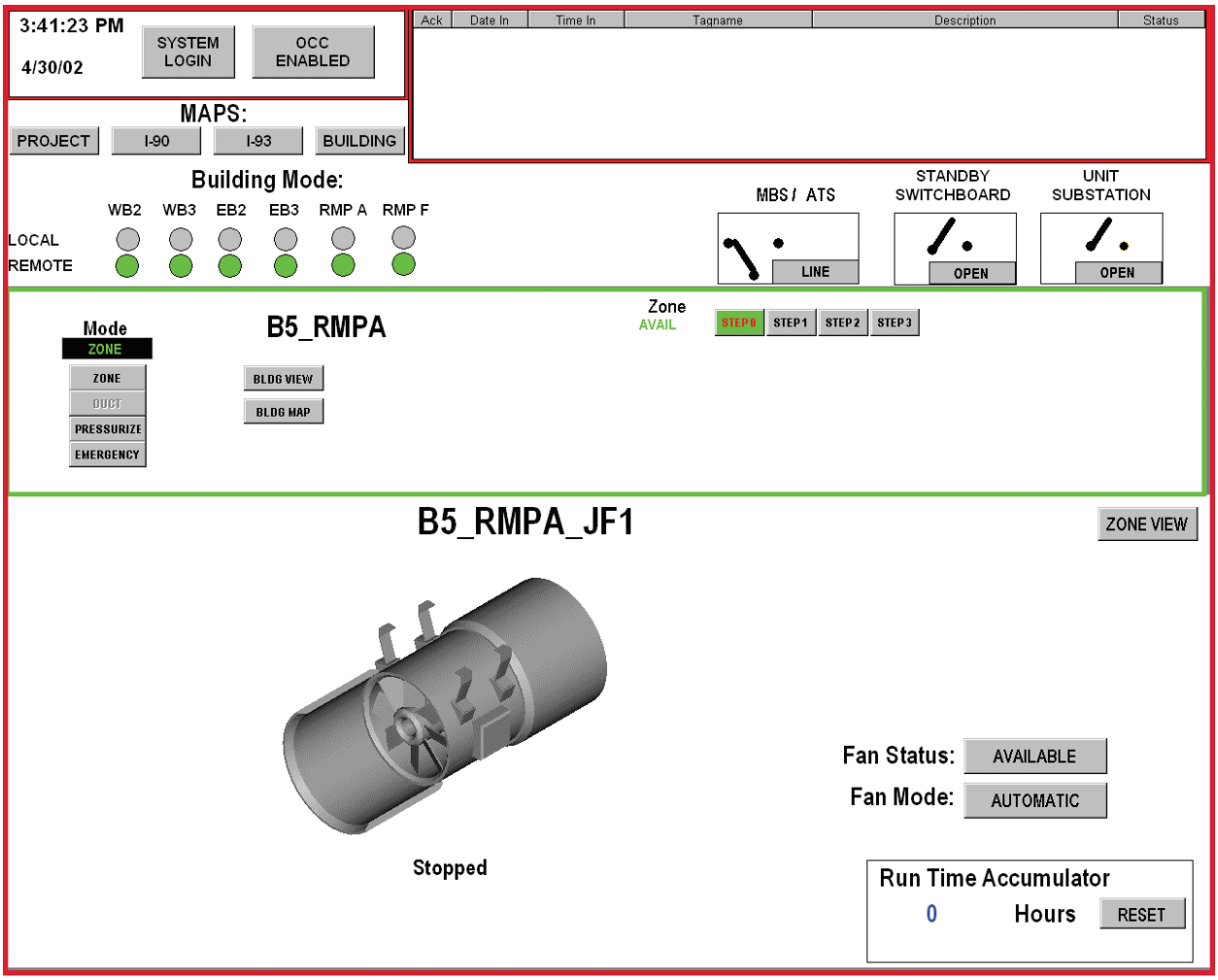

The Jet Fans used in this project are strategically placed within the Tunnel System to quickly evacuate Smoke and Carbon Monoxide should a critical level be reached. All systems report to the Operations Control Center so that Exhaust and Jet Fan speeds can be optimally tuned to match traffic flow conditions.

SPEC
PROCESS ENGINEERS WHO BUILD

CLIENTS

Fine Chemicals

- Arkwright, Inc.
- BF Goodrich
- Brita Corporation
- Cabot Corporation
- Creative Materials
- DSM NeoSol
- DSM Neo Resins
- Lamcotec
- Pharm-eco Laboratories
- Polaroid
- Presstek
- Strem Chemicals
- W.R. Grace

Biopharmaceutical

- Alkermes
- Antigenics, LLC
- Aquila BioPharmaceuticals
- Creative Biomolecules
- Dyax
- Lonza Biologics
- Perseptive Biosystems
- Praecis
- Repligen
- Serono Laboratories
- Transkaryotic Therapies, Inc.
- TranXenogen
- Universal Pharma Technologies

Pharmaceuticals

- Aphios Corporation
- AstraZeneca
- Bristol Meyers Squibb
- Collagen Corporation
- Diagnostics for All
- Dupont Merck
- Medimmune
- OHM Laboratories
- Pfizer
- Thermedics

Nano Technology

- Aspen Aerogel
- American Aerogel

General Manufacturing

- American Superconductor
- Brita Corporation
- Data General
- Fuel Cell Manufacturer (confidential client)
- E-Ink
- Emerson & Cuming Composite Materials
- P&G Gillette
- Metalor
- Nasoya Foods
- Sencorp
- Spalding Sports Worldwide
- United Parcel Service

Clean Technology

- Confidential Client (Cellulosic Ethanol)
- Nuvera Corporation
- St. Gobain
- Qteros
- Konarka

Microelectronics

- Alpha Industries
- ASTeX
- Brooks
- Entegris
- IntelliSense
- Metrigraphics
- Millipore
- MKS
- TEL NEXX

Controls

- AstraZeneca
- Central Artery Tunnel Project

Photonics / Fiber Optics

- Corning NetOptix
- Corning OCA
- Corning Optovac
- Galileo Electro